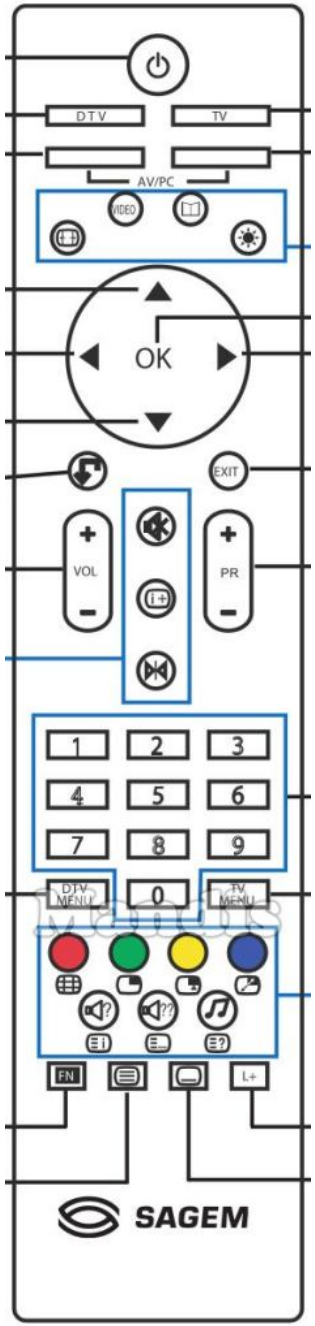

Original		Rechange	
TV	TV	SMART (LIST)	Smart / List
DTV	DTV	DISPLAY (MEDIA)	Display / Media
Norm	Norm	SETUP (OPT-TOOLS)	Setup / OPT /
Audio 1	Audio 1	AUDIO (LANG I/II)	Audio / Lang I/II
TV Menu	TV Menu	MENU (HOME)	Menu / Home
Brightness	Brightness	ZOOM (SIZE)	Zoom / Size
0	0	0 (HDMI - SAT)	0
1	1	1 (TV)	1
2	2	2 (DVD)	2
3	3	3 (CD - STB)	3
4	4	4 (VIDEO)	4
5	5	5 (TAPE)	5
6	6	6 (TUNER)	6
7	7	7 (AUX - HDD)	7
8	8	8 (USB)	8
9	9	9 (BLUETOOTH)	9
Red	Red	NETFLIX SEARCH	Red / Netflix / Search

Original		Rechange	
Green	Green	APP REPEAT	Green / APP / Repeat
Yellow	Yellow	YouTube REPEAT A-B	Yellow / YouTube / Repeat
Blue	Blue	Prime Video RANDOM	Blue / Prime Video / Random
Sound	Sound	SOUND (TITLE)	Sound / Title
Text	Text	TEXT (GOTO)	Text / Goto
Right	Right	Right	Right
AV	AV	AV INPUT (RDS)	AV / Input / RDS
Aspect	Aspect	PICTURE (FORMAT)	Picture / Format
Video	Video	SHIFT + 4 (VIDEO)	Shift + 4
Guide	Guide	GUIDE EPG (-/--)	Guide / EPG / -/--
Up	Up	Up	Up
Left	Left	Left	Left
OK	OK	OK	OK
Power	Power	Power	Power
Down	Down	Down	Down
Back	Back	BACK (RETURN)	Back / Return
Exit	Exit	EXIT (CLEAR)	Exit / Cancel / Clear

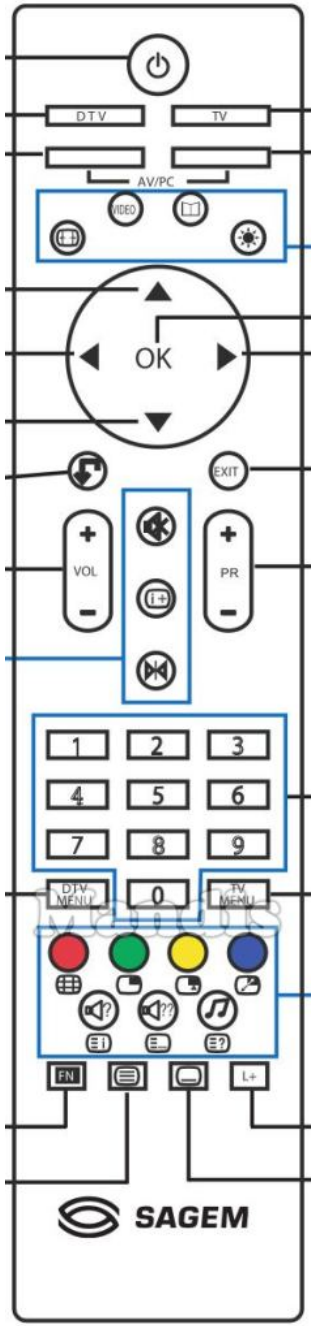

Original	Rechange	Original	Rechange
Vol +	Vol +		
Vol -	Vol -		
Mute	Mute / Dimmer		
PR+	CH+ / Page+		
PR-	CH- / Page-		

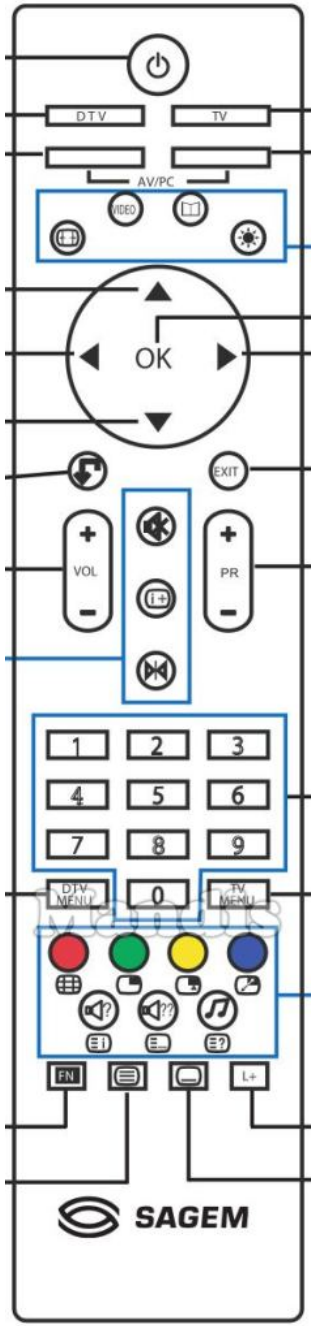

Original	Rechange	Original	Rechange
Power	Power	PR+	CH+ / Page+
DTV	Display / Media	Vol -	Vol -
TV	Smart / List	PR-	CH- / Page-
AV	AV / Input / RDS	Norm	Setup / OPT /
Video	Shift + 4	1	1
Guide	Guide / EPG / -/--	2	2
Aspect	Picture / Format	3	3
Brightness	Zoom / Size	4	4
Up	Up	5	5
Left	Left	6	6
OK	OK	7	7
Right	Right	8	8
Down	Down	9	9
Back	Back / Return	DTV Menu	Menu / Home
Exit	Exit / Cancel / Clear	DTV Menu	D. Menu / Top
Vol +	Vol +	0	0
Mute	Mute / Dimmer	Red	Red / Netflix / Search

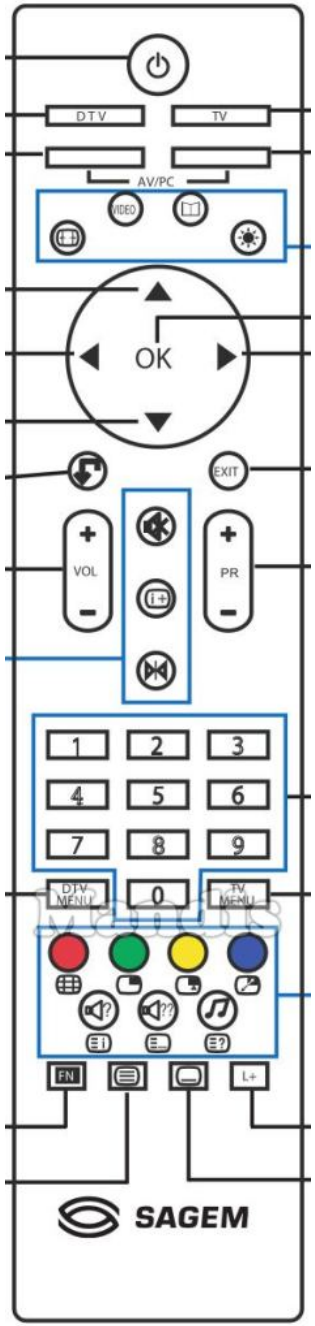

Original	Rechange	Original	Rechange
Green	Green / APP / Repeat		
Yellow	Yellow / YouTube / Repeat		
Blue	Blue / Prime Video / Random		
Audio 1	Audio / Lang I/II		
Sound	Sound / Title		
Text	Text / Goto		